INDOOR

GLARE FREE DOWNLIGHTS | **RECESSED DOWNLIGHTS**

TEMPEST-S15 SMALL 1600LM 940 FS WH 50°BA IP54 EM3H | **DOWNLIGHTS PRO**

52234

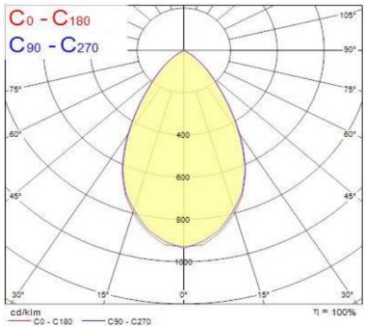

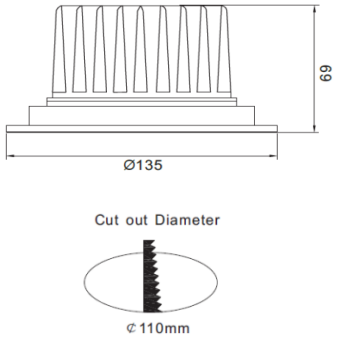

Optional chip brand

PRODUCT FEATURES:

● TEMPEST-B (CoB) Series are originally researched and developed by SmartLux with high ingress protection & mechanical resistance achieving IP54/IK06 in applications where more concentrated beam angles downlights are used with CoB LED technology with different beam angles.

● It features die-casting aluminum housing baking finished surface, using anodized 1090 aluminum reflector bright reflectivity>95%, high-grade frosted tempered glass diffuser with light transmittance> 92%, high effeminacy CoB LED's, with SmartLux high frequency remote external driver.

● Driver HF electronic standard ON/OFF non-dim with PF> 0.9 to PF>0.98 (other reputed driver brands are also possible to host).

● Various dimming option protocols such as triac, 1-10V, and Dali are also available upon request.

● Die-cast aluminum heat sink for better heat dissipation using the exterior fins structure to extend the life span of the luminaire for more than >50,000 hours.

● TEMPEST is completely sealed to achieve ingress protection of minimum IP54 (could be upgraded to IP65 where applicable) which makes it suitable for both uses of outdoor and indoor locations.

● High-quality efficiency, more than 50,000 hours life span @ L70/B10.

Images, line drawings and measurements illustrated may, in some cases be approximate and for guidance only. Colour finishes will be maintained as accurately as possible but matching cannot be guaranteed.

SmartLux Lighting are continually developing and improving its products. Technical specifications subject to change without prior notice.

SmartLux Lighting (Trading as a division of SmartLux Electric & Lighting Technology Ltd.)

E info@smartlux.co
W www.smartlux.co
Certification BS EN ISO 9001:2008

SMART
by smart lux

INDOOR

GLARE FREE DOWNLIGHTS | **RECESSED DOWNLIGHTS**

TEMPEST-S15 SMALL 1600LM 940 FS WH 50°BA IP54 EM3H | **DOWNLIGHTS PRO**

52234

Optional chip brand

PRODUCT OVERVIEW

Ordering Code	**52234**
Product Name	**TEMPEST-S15 SMALL 1600LM 940 FS WH 50°BA IP54 EM3H**
Technology	**LED**
Housing	**Aliminium extrusion powder coated**
Reflector	**High purity anodized aluminium 50° BA**
Trim	**Die-cast aluminium in powder coated in white RAL**
General Application	**Indoor & Outdoor**
Certification	**EU, CE, TUV, RoHs**
Leds	**CoB LEDs**
Fixture Luminous Flux (lm)	**4000K 1600lm**
Luminaire Efficacy (lm/W)	**106.6 (Standard flux)**
Colour Temperature (K)	**4000**
Light Colour	**Natural White**
CRI (Ra)	**>90**
Colour Variation Initial (SDCM)	**<3**
Photobiological Risk Group	**RG0**
Total Power Consumption (W)	**15**
Main Voltage (V)	**240V, 50/60HZ**
Electrical Protection	**Class III**
Dimmable	**Non dimmable as standard, Dimming options protocols are available upon request**
Colour (body/trim)	**Standard: white**
IP rating	**IP54 (IP65 upgrade is available upon request)**
IK rating	**06**
Included Lamp	**Integrated LED**
Diffuser	**Frosted tempered glass**
Emergency	**3 Hours**
Standard Driver	**36VDC 600mA, Electronic on/off non-dim with high power factor correction PFC > 0.95**
Operating Temperature °C	**-20 to +50**
Glow wire test ©	**650°C**
LOR (%)	**100%**
Average life (Normal) h	**>50,000 h, L70B10 @ 25°C.**
Warranty	**5 Years**

Anti Glare design

Various decorative reflector available

Smart system available

Turnable CCT function available

Product serialization with various size and wattage

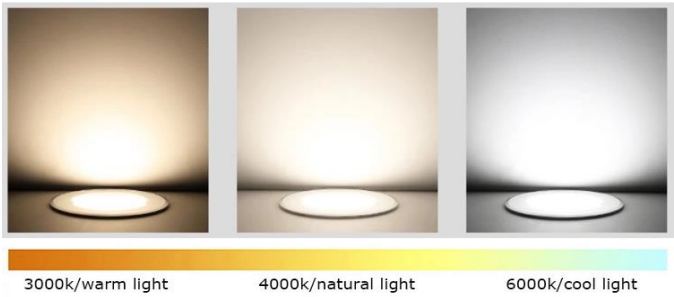

Images, line drawings and measurements illustrated may, in some cases be approximate and for guidance only. Colour finishes will be maintained as accurately as possible but matching cannot be guaranteed.

SmartLux Lighting are continually developing and improving its products. Technical specifications subject to change without prior notice.

SmartLux Lighting (Trading as a division of SmartLux Electric & Lighting Technology Ltd.)

E info@smartlux.co
W www.smartlux.co
Certification BS EN ISO 9001:2008